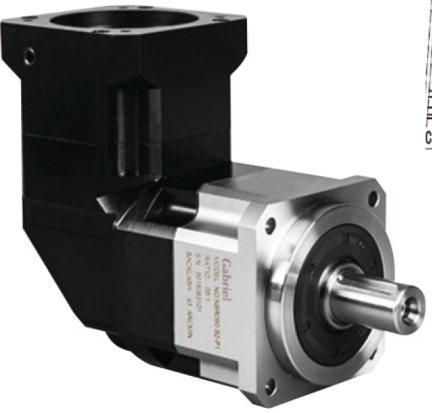

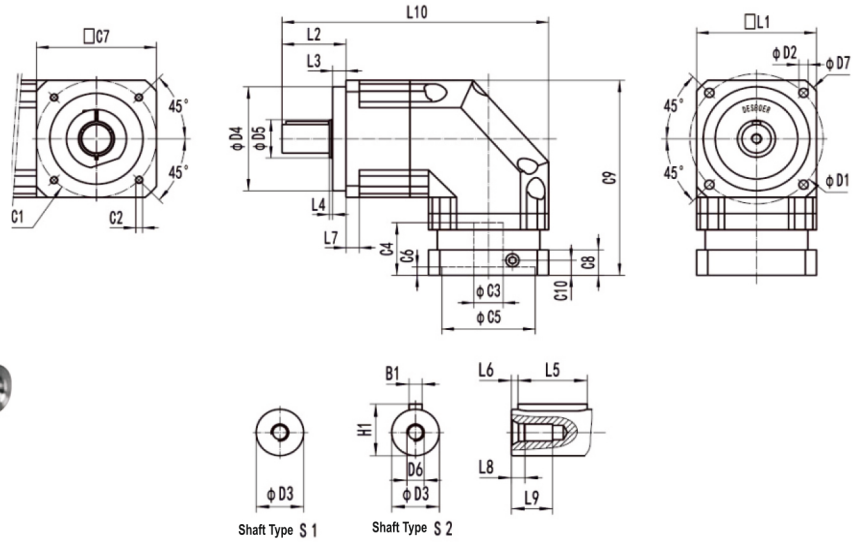

GABRIEL NBR180

（单位：mm）

NBR180	D1	D2	D3	D4	D5	D6	D7	L1	L2	L3	L4	L5	L6	L7
Single Section	215	13	55	160	70	M20×2.5P	240	180	105	20	3.5	70.5	6	20

NBR180	L8	L9	L10	C1*	C2*	C3*	C4*	C5*	C6*	C7*	C8*	C9*	C10*	B1	H1
Single Section	15	42	394	200	M12×1.75P	≤48	115	114.3	10	180	29	303.5	52	16	59

*Dimensions based on servo-motor, please contact us for custom made order.

Reducer Performance Information

Segment Number		Single Segment									
Ration	i	3	4	5	6	7	8	9	10	14	20
Rated Output Torque	Nm	588	1040	1200	1100	1100	1000	900	900	1100	900
Emergency Stop Torque	Nm	三倍额定输出力矩									
Rated Input Speed	rpm	3000									
Max. Input Speed	rpm	6000									
Ultraprecise Backlish	arcmin	≤2									
Precise Backlish	arcmin	≤4									
Standard Backlish	arcmin	≤6									
Torsional Rigidity	Nm/arcmin	145									
Maximum Bending Moment	N	14500									
Max. Axial Force	N	7250									
Service Life	hr	20000(连续运转为10000)									
Efficiency	%	≥95%									
Weight	kg	51									
Operating Temperatue	℃	－10℃～+90℃									
Lubrication		合成润滑油脂									
Protection Class		IP64									
Mounting Position		任意方向									
Noise Level (N1=3000rpm, Non-Loaded)	dB（A）	≤72									
Rotary Inertia	kg · cm²	68.9								65.6	

★ Maximum output force 60%
▲ Output rotation speed 100rpm

NB090 — 10 — S2 — P1 CZ

MODEL :
NB042,NB042A,NB060,NB060A,NB090,
NB090A,NB115,NB142,NB180,NB220

Output Shaft Selection :
S1:
S2:

RATIO :
3,4,5,6,7,8,9,10
15,20,25,30,35,40,45,50,
60,70,80,90,100

Back Lash :
P0:
P1:
P2: